Security Door End Panel Installation

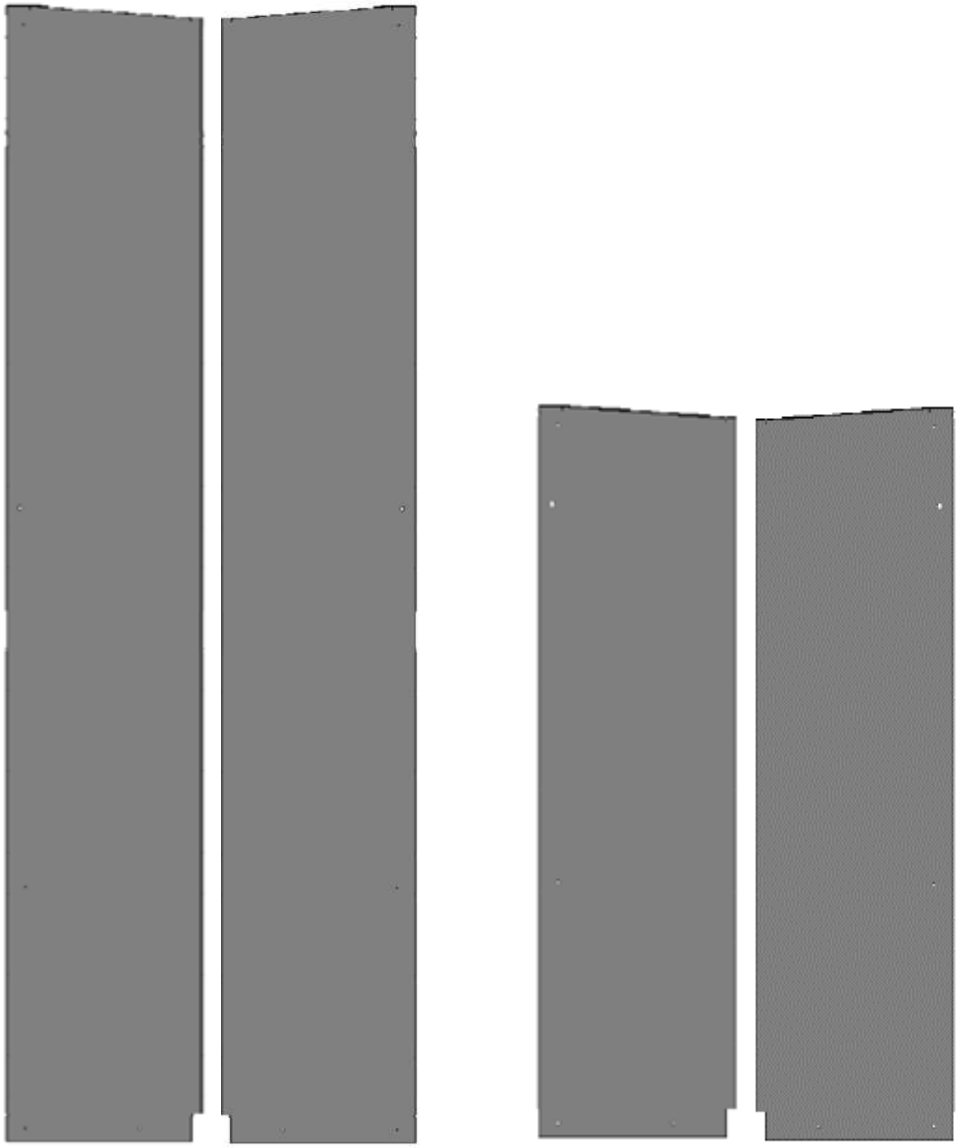

Left Right Left Right

INTRODUCTION:
CAREFULLY READ THE CONTENTS OF THESE INSTRUCTIONS, AS THE INSTRUCTIONS INDICATE THE CORRECT STEP BY STEP PROCEDURE TO ASSEMBLE THE PRODUCT. IN THE EVENT OF ASSEMBLY PROBLEMS OR MISSING PARTS, PLEASE CALL OUR CUSTOMER SERVICE DEPARTMENT AT **616-842-5330**.

THE MANUFACTURER OF THIS DISPLAY ASSUMES NO LIABILTY FOR INJURY CAUSED BY IMPROPER ASSEMBLY/INSTALLATION OF THIS DISPLAY.

Standard Height Security Door
End Panel Kit
Item #291405 (Silver)
Item #291404 (Black)

Low Profile Security Door
End Panel Kit
Item #291407 (Silver)
Item #291406 (Black)

5/2/2018

HARBOR.

Security Door End Panel Installation

Prior to installing end panels, follow the instructions for Infinity Fixture Installation and Security Door Installation. Telescoping fixtures must be set to Standard Height 85”.

Right Side End Panel Top View

Left Side End Panel Top View

Identify the left hand panel and right hand panel before you begin.

Note: The side with the smaller channel will face the front of the fixture, while the side with the larger channel will face the back.

HARBOR.

Security Door End Panel Installation

Standard Height End Panels:
Remove lock knob from left and right sides of fixture. (Do not discard)

To install left side end panel, remove the retaining nut and spring clip. The end panel will locate over the spring clip stud. (Do not discard)

Low Profile End Panels:
Lock knob and spring clip will not be present on low profile fixtures, continue to next page.

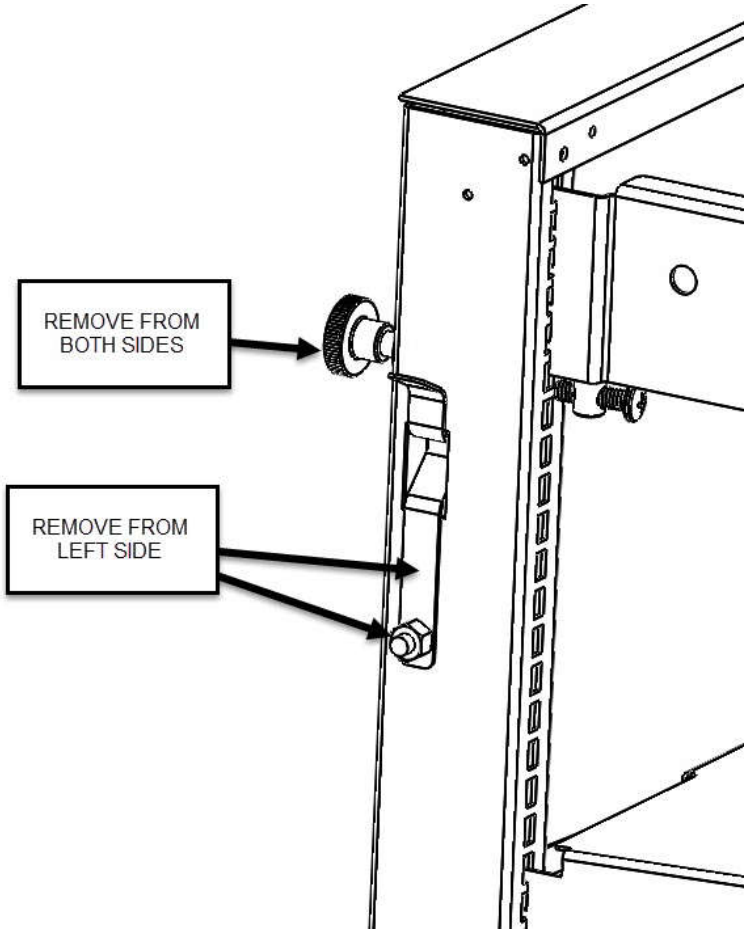

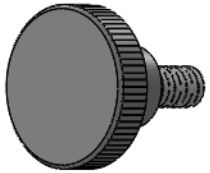
Lock Knob

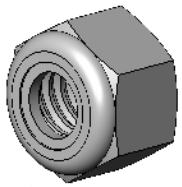
Spring Clip Retaining Nut

HARBOR.

Security Door End Panel Installation

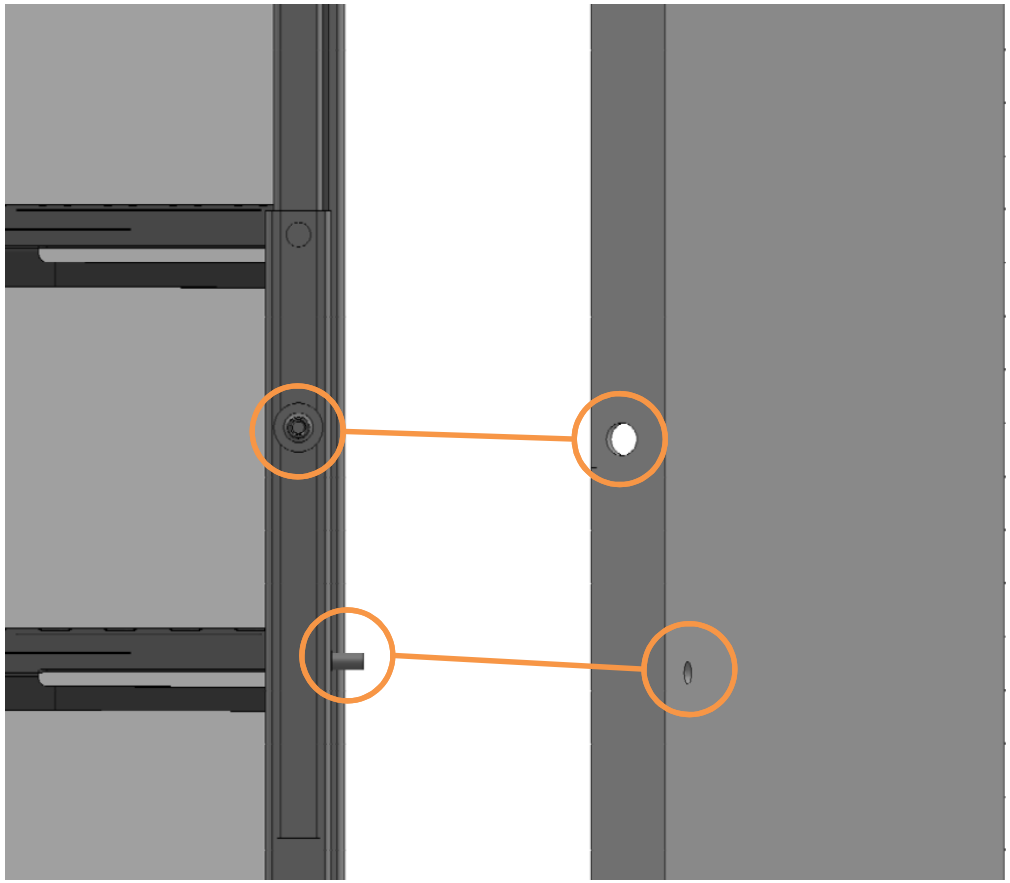

All Fixtures:
Align end panel with stud for lock knob and stud for spring clip on left side of fixture. (Right side will not have spring clip stud)

Standard Height End Panels:
Reinstall lock knob on both sides and the spring clip retaining nut on the left side. (Spring clip will not be used)

HARBOR.

Security Door End Panel Installation

All Fixtures:
Secure end panels on each side to lower leg and uprights using the large phillips screws at the four (4) locations shown

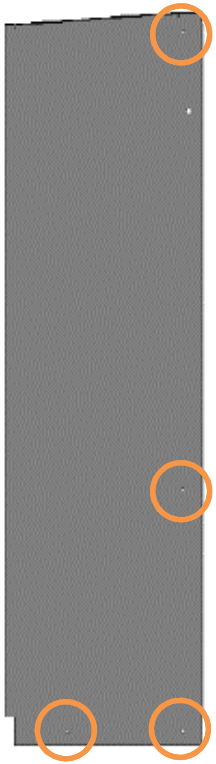

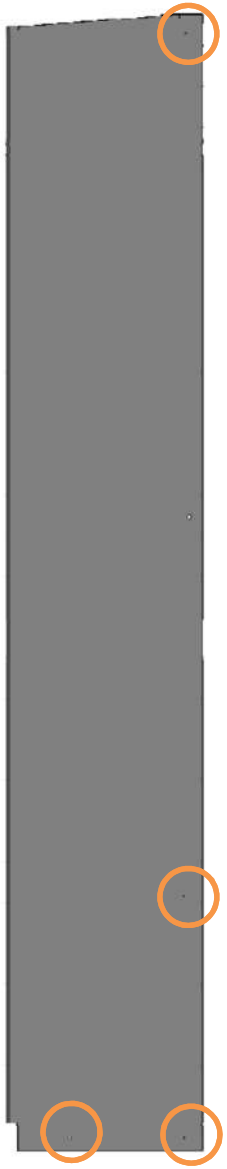

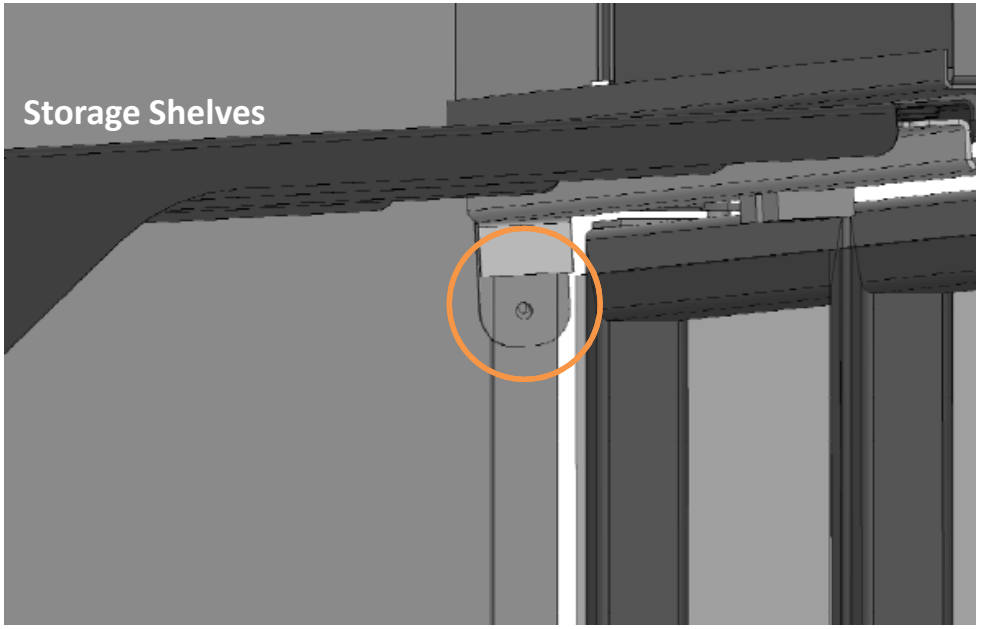

All Fixtures:
Secure end panels to upper security door bracket using the smaller phillips screws. ***Do not*** use power driver. Install by hand with phillips screwdriver only to prevent stripping. If security door is not present, this location will not be utilized.

HARBOR.