Flex Frame 2

Installing Adjustable Width Pusher

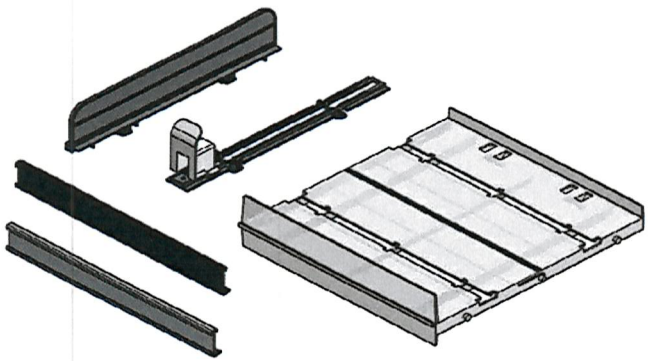

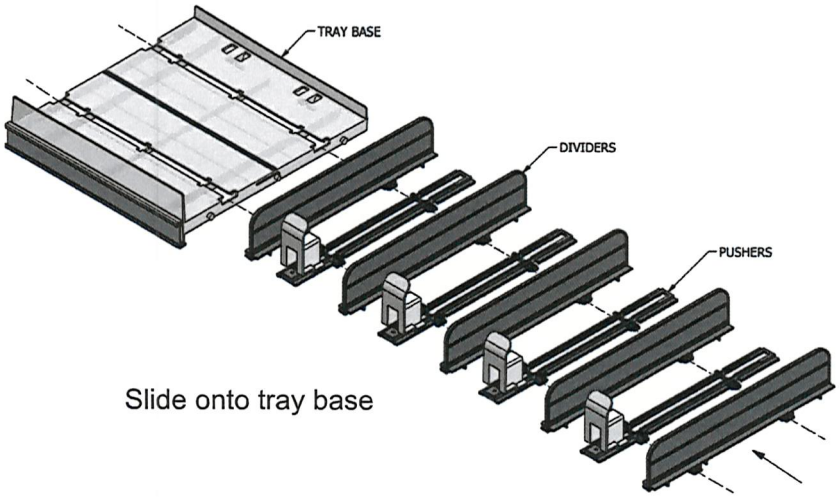

Slide onto tray base

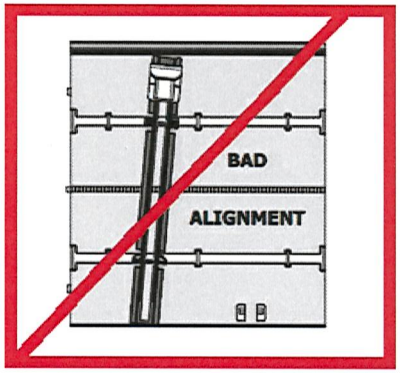

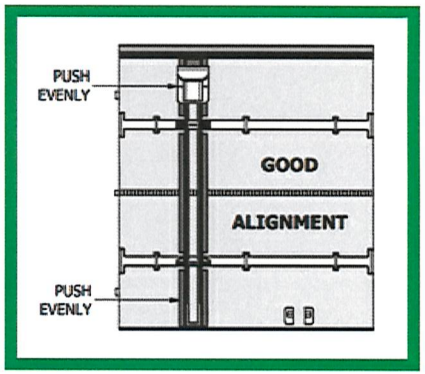

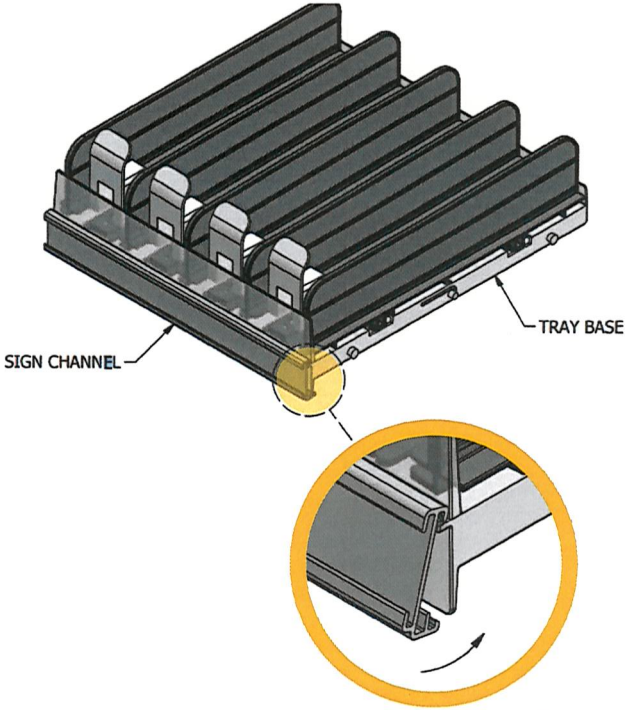

HARBOR.
Convenience Retail
harborcstore.com
1-800-968-6991